N/A

Work Order ID 126952

Tuesday, December 02, 2014 2:17:42 PM

126952 PRELIMINARY ISSUE

Item ID: D5155-1 POSITIVE RECALL N/A **Accept** *N900040100* **Setup Start** *NS1*

Revision ID: PRELIM **Stop** *NS2*

Item Name: Co-Pilot Collective Head (205)

Start Date: 12/9/2014 **Start Qty:** 1.00 *1*

Required Date: 12/9/2014 **Req'd Qty:** 1.00 *1*

Reference:

Cust Item ID:

Customer:

Approvals: **Process Plan:** MLS **Date:** 14-12-02 **Tooling:** _____ **Date:** _____

QC: _____ **Date:** _____ **SPC (Y/N):** _____ **Date:** _____

Run Start *NR1*

Stop *NR2*

Sequence ID/ Work Center ID	Operation Description	Set Up/ Run Hours	Tool ID	Tool #	Plan Code	Accept Qty	Reject Qty	Reject Number	Insp. Stamp
Draw Nbr: D5155	Revision Nbr: ~~PA8~~ ~~PA9~~ B								
100	Cut blanks as per folio	0.00							DAS 08 9-89
100 Bandsaw									
Jeaspa Bandsaw	**Memo** CUT BLANK AT ~~5.500"~~ 5.000"	0.00				1	0		
110		0.00							DAS 08 9-89
110 HAAS 5AXIS									
HAAS CNC vertical machine #5	**Memo** MACHINE AS PER DWG & FOLIO FB349/ D5155-1 FOLIO REV: ~~4A~~ B DWG REV: ~~PA7~~ B ***DO NOT BUFF OR POLISH PART*** DEBURR	0.00				1	0		

14/12/09

14/12/13

15/09/22

DQA: _____ Date: _____

WORK ORDER NON-CONFORMANCE / UPDATE

QA Closed: Date: Work Order update only ☐

Work Order: _____

Part No. _____

NCR No. _____

DISPOSITION

Rework ☐
Scrap ☐
Use-as-is ☐
Suspected Unapproved ☐

AGAINST DEPARTMENT/PROCESS

Skid-tube ☐ Crosstube ☐ Water Jet ☐ Engineering ☐
Machining ☐ Small Fab ☐ Prod. Eng. Coor. ☐ Quality ☐
Thermoforming ☐ Finishing ☐ Rec/Store/Packaging ☐ Other ☐
Large Fab ☐ Composite ☐ Supplier ☐

Root Cause		Date	Step	Qty	Description of work order update or non-conformance	Initial Chief Eng	Action Description	Sign & Date	Verification	QC Inspector
Design	☐									
Doc/Data	☐									
Equip/Tooling	☐									
Handling/Pre	☐									
Material	☐									
Operator	☐									
Offset/Setup	☐									
Process	☐									
Supplier	☐									
Training	☐									
Transport	☐									
Unapproved	☐									

FAULT CATEGORY

Landing Gear

☐ Bending
☐ Centre Not Concentric
☐ Cracks
☐ Crimp/Kink/Ripple/Wave
☐ Cuffs
☐ Crushing
☐ Heat Treat
☐ Inspection Strip in Tube
☐ Marks/Chatter
☐ Turning Sequence
☐ Wave/Twist in Tube

General

☐ Bend
☐ BOM/Route
☐ Broken/Damage/Defect
☐ Burrs
☐ Contamination
☐ Countersink
☐ Cut Too Short
☐ Drawing
☐ Drill Holes
☐ Finish
☐ Fit/Function
☐ Folio/Program
☐ Grain
☐ Hardware
☐ Inspection Incomplete/Unqualified
☐ Instructions Incomplete/Unclear
☐ Misaligned/off center
☐ Mislabeled
☐ Misread
☐ Off-set
☐ Out of Calibration
☐ Out of Sequence
☐ Outside Dimensions
☐ Over/Under tolerance
☐ Part Incorrect
☐ Part Lost/Missing
☐ Part Moved
☐ Positioned Wrong
☐ Power Loss/Surge
☐ Pressure/Forced
☐ Set-up
☐ Temperature/Cure
☐ Weld
☐ Wrong Stock Pulled
☐ Other

_____
_____
_____

Item ID: D5155-1
Revision ID: PRELIM
Item Name: Co-Pilot Collective Head (205)
Start Date: 12/9/2014 **Start Qty:** 1.00 *1*
Required Date: 12/9/2014 **Req'd Qty:** 1.00 *1*
Reference:

Accept *N900040100*
Setup Start *NS1*
Stop *NS2*
Cust Item ID:
Customer:

Approvals: **Process Plan:** _____ **Date:** _____ **Tooling:** _____ **Date:** _____
QC: _____ **Date:** _____ **SPC (Y/N):** _____ **Date:** _____

Run Start *NR1*
Stop *NR2*

Sequence ID/ Work Center ID	Operation Description	Set Up/ Run Hours	Tool ID	Tool #	Plan Code	Accept Qty	Reject Qty	Reject Number	Insp. Stamp
120	QC2- Inspect parts off machine FAI/FAIB	0.00							
120 QC Quality Control	**Memo**	0.00	D.A 14/12/13 D.A 15/09/22			1	Ø		DAS 08 9-89
130	QC8- Inspect parts - second check	0.00							
130 QC Quality Control	**Memo**	0.00	POSITIVE RECALL EFFECTIVE MLS AUTH 14-12-02 RELEASED _____ DATE _____ N/A			1	Ø		DAS 44 9-89 15/09/22
140	QC5- Inspect part completeness to step on W/O	0.00							
140 QC Quality Control	**Memo**	0.00				1			AS 38 9-89

POSITIVE RECALL

RDS903

OCT 08 2015

DQA: _____ Date: _____

WORK ORDER NON-CONFORMANCE / UPDATE

QA Closed: Date: Work Order update only ☐

Work Order: _____

Part No. _____

NCR No. _____

DISPOSITION

Rework ☐
Scrap ☐
Use-as-is ☐
Suspected Unapproved ☐

AGAINST DEPARTMENT/PROCESS

Skid-tube ☐ Crosstube ☐ Water Jet ☐ Engineering ☐
Machining ☐ Small Fab ☐ Prod. Eng. Coor. ☐ Quality ☐
Thermoforming ☐ Finishing ☐ Rec/Store/Packaging ☐ Other ☐
Large Fab ☐ Composite ☐ Supplier ☐ ☐

Root Cause		Date	Step	Qty	Description of work order update or non-conformance	Initial Chief Eng	Action Description	Sign & Date	Verification	QC Inspector
Design	☐									
Doc/Data	☐									
Equip/Tooling	☐									
Handling/Pre	☐									
Material	☐									
Operator	☐									
Offset/Setup	☐									
Process	☐									
Supplier	☐									
Training	☐									
Transport	☐									
Unapproved	☐									

FAULT CATEGORY

Landing Gear

☐ Bending
☐ Centre Not Concentric
☐ Cracks
☐ Crimp/Kink/Ripple/Wave
☐ Cuffs
☐ Crushing
☐ Heat Treat
☐ Inspection Strip in Tube
☐ Marks/Chatter
☐ Turning Sequence
☐ Wave/Twist in Tube

General

☐ Bend
☐ BOM/Route
☐ Broken/Damage/Defect
☐ Burrs
☐ Contamination
☐ Countersink
☐ Cut Too Short
☐ Drawing
☐ Drill Holes
☐ Finish
☐ Fit/Function
☐ Folio/Program
☐ Grain
☐ Hardware
☐ Inspection Incomplete/Unqualified
☐ Instructions Incomplete/Unclear
☐ Misaligned/off center
☐ Mislabeled
☐ Misread
☐ Off-set
☐ Out of Calibration
☐ Out of Sequence
☐ Outside Dimensions
☐ Over/Under tolerance
☐ Part Incorrect
☐ Part Lost/Missing
☐ Part Moved
☐ Positioned Wrong
☐ Power Loss/Surge
☐ Pressure/Forced
☐ Set-up
☐ Temperature/Cure
☐ Weld
☐ Wrong Stock Pulled
☐ Other

_____
_____
_____

Item ID: D5155-1
Revision ID: PRELIM
Item Name: Co-Pilot Collective Head (205)
Start Date: 12/9/2014 **Start Qty:** 1.00 *1*
Required Date: 12/9/2014 **Req'd Qty:** 1.00 *1*
Reference:

Accept *N900040100*
Setup Start *NS1*
Stop *NS2*
Cust Item ID:
Customer:

Approvals: **Process Plan:** _____ **Date:** _____ **Tooling:** _____ **Date:** _____
QC: _____ **Date:** _____ **SPC (Y/N):** _____ **Date:** _____

Run Start *NR1*
Stop *NR2*

Sequence ID/ Work Center ID	Operation Description	Set Up/ Run Hours	Tool ID	Tool #	Plan Code	Accept Qty	Reject Qty	Reject Number	Insp. Stamp
160	Identify as per dwg & Stock Location: ST 150	0.00							
160					J	OCT 08 2015			
Packaging	**Memo**	0.00							
Packaging									
170	QC21- Final Inspection - Work Order Release	0.00							
170						MLS OCT 09 2015			
QC	**Memo**	0.00							
Quality Control									

20151008
ST

DQA: _____ Date: _____

WORK ORDER NON-CONFORMANCE / UPDATE

QA Closed: Date: Work Order update only ☐

Work Order: _____

Part No. _____

NCR No. _____

DISPOSITION

Rework ☐
Scrap ☐
Use-as-is ☐
Suspected Unapproved ☐

AGAINST DEPARTMENT/PROCESS

Skid-tube ☐ Crosstube ☐ Water Jet ☐ Engineering ☐
Machining ☐ Small Fab ☐ Prod. Eng. Coor. ☐ Quality ☐
Thermoforming ☐ Finishing ☐ Rec/Store/Packaging ☐ Other ☐
Large Fab ☐ Composite ☐ Supplier ☐ ☐

Root Cause		Date	Step	Qty	Description of work order update or non-conformance	Initial Chief Eng	Action Description	Sign & Date	Verification	QC Inspector
Design	☐									
Doc/Data	☐									
Equip/Tooling	☐									
Handling/Pre	☐									
Material	☐									
Operator	☐									
Offset/Setup	☐									
Process	☐									
Supplier	☐									
Training	☐									
Transport	☐									
Unapproved	☐									

FAULT CATEGORY

Landing Gear

☐ Bending
☐ Centre Not Concentric
☐ Cracks
☐ Crimp/Kink/Ripple/Wave
☐ Cuffs
☐ Crushing
☐ Heat Treat
☐ Inspection Strip in Tube
☐ Marks/Chatter
☐ Turning Sequence
☐ Wave/Twist in Tube

General

☐ Bend
☐ BOM/Route
☐ Broken/Damage/Defect
☐ Burrs
☐ Contamination
☐ Countersink
☐ Cut Too Short
☐ Drawing
☐ Drill Holes
☐ Finish
☐ Fit/Function
☐ Folio/Program
☐ Grain
☐ Hardware
☐ Inspection Incomplete/Unqualified
☐ Instructions Incomplete/Unclear
☐ Misaligned/off center
☐ Mislabeled
☐ Misread
☐ Off-set
☐ Out of Calibration
☐ Out of Sequence
☐ Outside Dimensions
☐ Over/Under tolerance
☐ Part Incorrect
☐ Part Lost/Missing
☐ Part Moved
☐ Positioned Wrong
☐ Power Loss/Surge
☐ Pressure/Forced
☐ Set-up
☐ Temperature/Cure
☐ Weld
☐ Wrong Stock Pulled
☐ Other _____

Picklist Print

Tuesday, December 09, 2014 1:57:31 PM

Work Order ID: 126952 *126952*

Parent Item: D5155-1 *D5155-1*

Parent Item Name: Co-Pilot Collective Head (205)

Start Date: 12/9/2014 **Required Date:** 12/9/2014

Start Qty: 1.00 **Required Qty:** 1.00

Comments: IPP REV.A NEW ISSUE JFS 14/12/01 VERIFIED BY: JLM

Component Item ID/ Item Name	Replacement Item ID	Mfg/ Purch	Bin Item	Primary Location	Last Location	Route Seq ID	Unit of Measure	Qty on Hand	Qty per Kit	Total Qty	Qty Issued	Date Issued	Status
M6061T6B2.750X03.750		Purchased	No			100	f	8.6570	0.417	1			

M6061T6B2.750X03.750 **

6061-T6 BAR 2.75 X 3.75

B.A 14/12/09

Location	Loc Qty	Loc Code
MAT005	8.657	
114854	0.657	
m127464	8	

0.4210 ft

ITEM	QTY -041	P/N	DESCRIPTION
1	X	D5155-041	CO-PILOT COLLECTIVE HEAD ASSEMBLY (205)
2	1	D4410-7	CONDUIT
3	1	D5155-1	CO-PILOT COLLECTIVE HEAD (205)
4	1	D5155-9	CO-PILOT COLLECTIVE HEAD (205)
5	1	D5156-9	BACK PLATE
6	11	90296A108	HELI-COIL INSERT (6-32 X 0.276)
7	2	MS16562-223	SLOTTED SPRING PIN
8	7	MS24693-24B	SCREW, CSK 100°

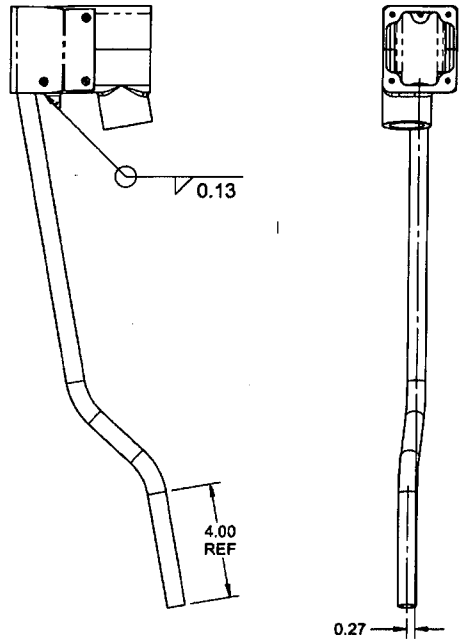

D5155-041 WELDING DETAIL

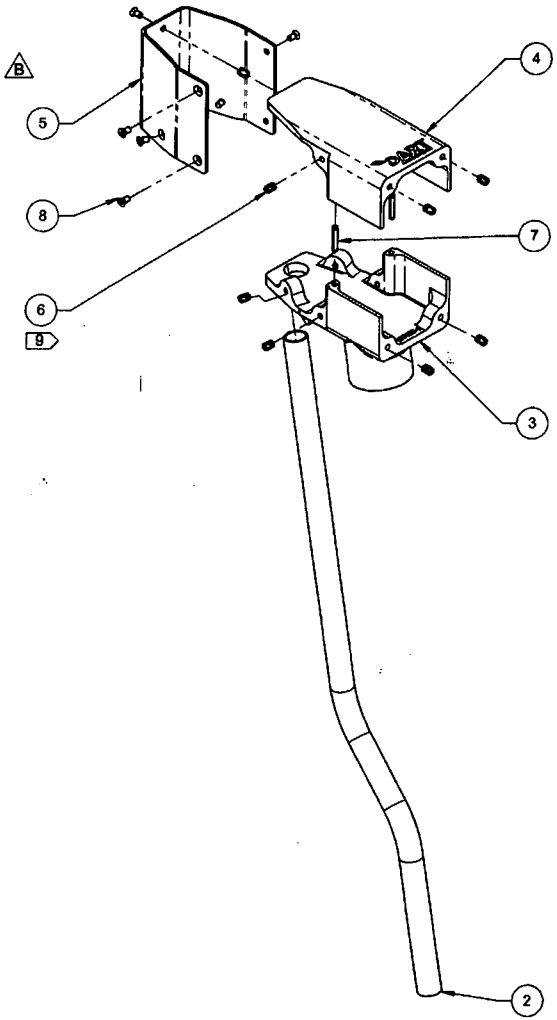

RELEASED
A.P. 2015 JUL 02 ECN 15-577

NOTES:
1) MATERIAL: N/A
2) FINISH: ANODIZE BLACK PER MIL-A-8625F TYPE I OR IB OR IC OR II OR IIB CLASS 2 AFTER WELDING
3) TOLERANCES: PER DART QSI 018 UNLESS OTHERWISE NOTED
4) UNITS: INCHES UNLESS OTHERWISE NOTED
5) BREAK SHARP EDGES: 0.005 TO 0.010 MAX
6) IDENTIFICATION: IDENTIFY PER QSI 044 6.1
7) WEIGHT: 1.08 lbs
8) WELD PER DART QSI 004
9) INSTALL AFTER ANODIZING

D5155-041 CO-PILOT COLLECTIVE HEAD ASSEMBLY (205)

REV.	DESCRIPTION	BY	DATE
B	REVISE DIM; ZN D3-7, REVISE NOTE 2; ZN A8-13, A8-14, REVISE LENGTH OF PIN; ZN D6-1, D6-2, D5-3, D6-4, REVISE DEPTH; ZN C7-5, C7-7, C7-9, C7-11, C5-13, C4-14, REVISE DIM; ZN C7-5, C7-7, C7-9, C6-11, B7-13, B7-14, B2-5, B2-7, B2-9, B2-11, C5-13, C4-14, D8-6, D8-8, D8-10, D5-6, D5-8, D5-10, D5-12, B8-7, D7-12, C7-5, C7-7, C7-9, C6-11, D2-13, D2-14	VS	15.05.21
A	NEW ISSUE	VS	14.09.10

DESIGN	VS	DART AEROSPACE LTD	
DRAWN	VS	HAWKESBURY, ONTARIO, CANADA	
CHECKED	RF	DRAWING NO. D5155	REV. B
MFG. APPR.	JFS		SHEET 1 OF 14
APPROVED	HS	TITLE CO-PILOT COLLECTIVE HEAD	SCALE NTS
DE APPR.	DS		
DATE	15.05.21		

APPROVED

COPYRIGHT © 2013 BY DART AEROSPACE LTD
THIS DOCUMENT IS PRIVATE AND CONFIDENTIAL AND IS SUPPLIED ON THE EXPRESS CONDITION THAT IT IS NOT TO BE USED FOR ANY PURPOSE OR COPIED OR COMMUNICATED TO ANY OTHER PERSON WITHOUT WRITTEN PERMISSION FROM DART AEROSPACE LTD.

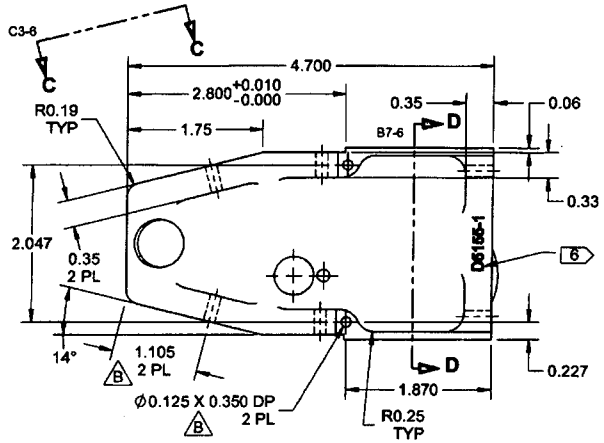

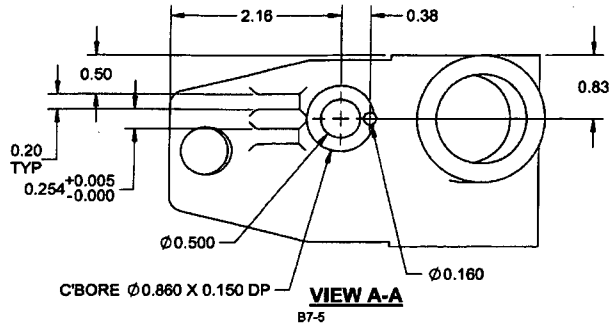

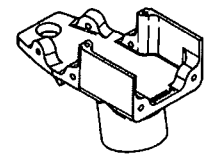

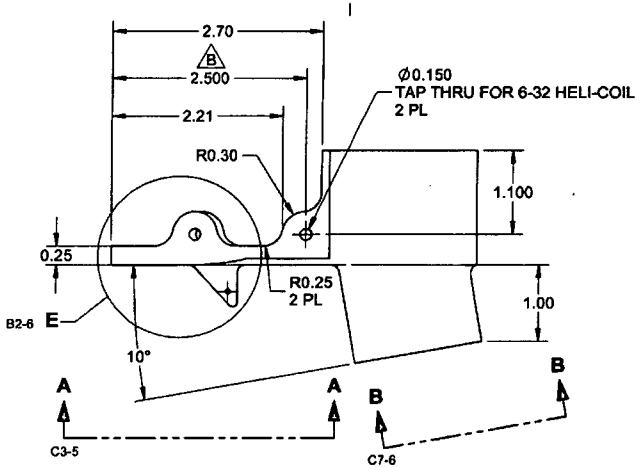

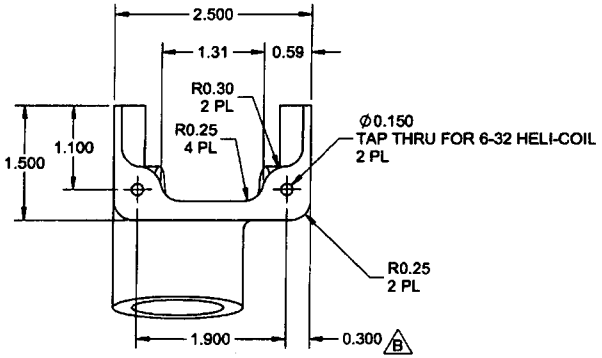

RELEASED
A.P. 2015 JUL 02

NOTES:
1) MATERIAL: 6061-T6/T651/T6511/T62 ALUMINUM BAR
PER QQ-A-225/8 OR AMS-QQ-A-225/8 (OR AMS 4117/4128/4115/4116)
OR QQ-A-200/8 OR AMS-QQ-A-200/8 (OR AMS 4160)
OR ASTM B211 OR ASTM B221
REF DART SPEC M6061T6B
2) FINISH: NONE
3) TOLERANCES: PER DART QSI 018 UNLESS OTHERWISE NOTED
4) UNITS: INCHES UNLESS OTHERWISE NOTED
5) BREAK SHARP EDGES: 0.005 TO 0.010 MAX
6) IDENTIFICATION: IDENTIFY PER QSI 044 6.3 IN THIS AREA TO MAX DEPTH OF 0.010 WITH A MIN. TOOL RAD OF R0.010
7) WEIGHT: 0.47 lbs
8) UNDIMENSIONED FEATURES ARE DEFINED BY D5155-1.SLDPRT

D5155-1 CO-PILOT COLLECTIVE HEAD (205)

APPROVED

DESIGN	VS	DART AEROSPACE LTD
DRAWN	VS	HAWKESBURY, ONTARIO, CANADA
CHECKED	RF	DRAWING NO. D5155 REV. B
MFG. APPR.	JFS	SHEET 5 OF 14
APPROVED	HS	TITLE CO-PILOT COLLECTIVE HEAD SCALE NTS
DE APPR.	DS	
DATE	15.05.21	

COPYRIGHT © 2013 BY DART AEROSPACE LTD
THIS DOCUMENT IS PRIVATE AND CONFIDENTIAL, AND IS SUPPLIED ON THE EXPRESS CONDITION THAT IT IS NOT TO BE USED FOR ANY PURPOSE OR COPIED OR COMMUNICATED TO ANY OTHER PERSON WITHOUT WRITTEN PERMISSION FROM DART AEROSPACE LTD.

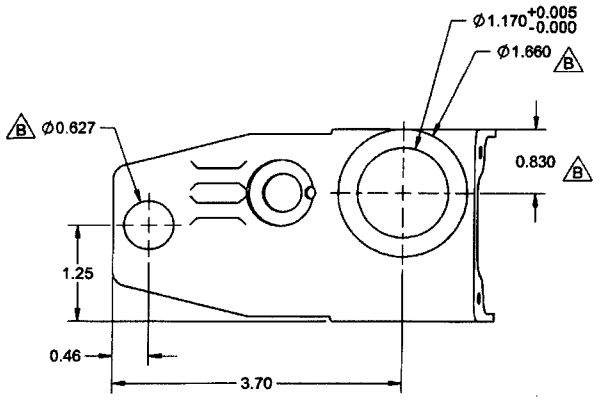

VIEW B-B
B5-5

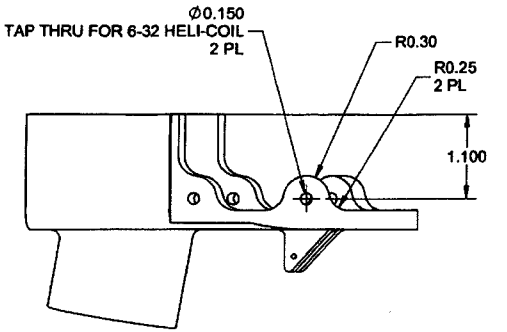

VIEW C-C
D7-5

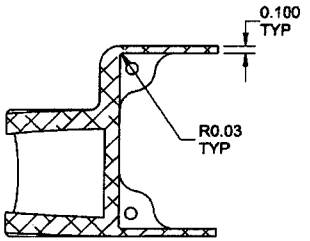

SECTION D-D
D6-5

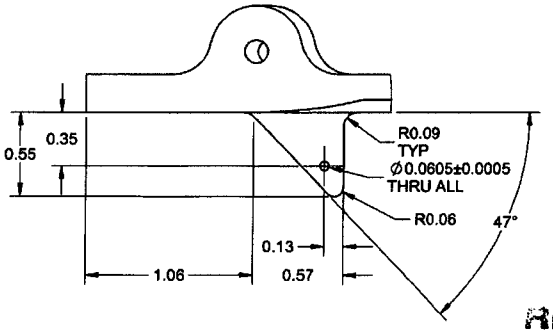

DETAIL E
B7-5

RELEASED
A.C. 2015 JUL 02

NOTES:
1) MATERIAL: N/A
2) FINISH: N/A
3) TOLERANCES: PER DART QSI 018 UNLESS OTHERWISE NOTED
4) UNITS: INCHES UNLESS OTHERWISE NOTED
5) BREAK SHARP EDGES: 0.005 TO 0.010 MAX
6) IDENTIFICATION: N/A
7) WEIGHT: N/A

D5155-1 CO-PILOT COLLECTIVE HEAD (205)
DETAIL VIEWS

APPROVED

DESIGN	VS
DRAWN	VS
CHECKED	RF
MFG. APPR.	JFS
APPROVED	HS
DE APPR.	DS
DATE	15.05.21

DART AEROSPACE LTD
HAWKESBURY, ONTARIO, CANADA

DRAWING NO. D5155 REV. B
SHEET 6 OF 14
TITLE CO-PILOT COLLECTIVE HEAD SCALE NTS

COPYRIGHT © 2013 BY DART AEROSPACE LTD
THIS DOCUMENT IS PRIVATE AND CONFIDENTIAL AND IS SUPPLIED ON THE EXPRESS CONDITION THAT IT IS NOT TO BE USED FOR ANY PURPOSE OR COPIED OR COMMUNICATED TO ANY OTHER PERSON WITHOUT WRITTEN PERMISSION FROM DART AEROSPACE LTD.

DART AEROSPACE LTD	Work Order:	126952
Description: CO - PILOT COLLECTIVE HEAD (205)	Part Number:	D5155-1
Inspection Dwg: D5155 Rev: B		Page 1 of 2

INSPECTION SHEET

Drawing Dimension	Tolerance	Actual Dimension	Accept	Reject	Method of Inspection	Comments
4.700	+/-.010	4.697	✓		Vern	GA-13
2.800	+.010 / -.000	2.800	✓		H-6	31006
1.75	+/-.030	1.750	✓		"	"
R0.19	+/-.030	R0.188	✓		R-6	ref.
2.047	+/-.005	2.047	✓		Vern	GA-13
0.35	+/-.030	0.351	✓		"	"
14°	+/- ½°	14°	✓		Angle M.	CNC-17
ϕ0.125 x .350	+.004 -.001 / +/-.010	ϕ0.125 x .351	✓		Vern	GA-13
R0.25	+/-.030	R0.250	✓		R-6	ref.
1.870	+/-.010	1.870	✓		Vern	GA-13
0.227	+/-.010	0.227	✓		"	"
0.33	+/-.030	0.322	✓		"	"
0.06	+/-.030	0.064	✓		"	"
0.35	+/-.030	0.348	✓		"	"
2.500	+/-.010	2.501	✓		"	"
2.21	+/-.030	2.210			"	"
R0.30	+/-.030	R0.300	✓		R-6	ref.
0.25	+/-.030	0.248	✓		Vern	GA-13
R0.25	+/-.030	R0.250	✓		R-6	ref.
1.00	+/-.030	1.000	✓		Vern	GA-13
1.100	+/-.010	1.097	✓		"	"
ϕ0.150	+.005 / -.001	ϕ0.152	✓		"	"
1.500	+/-.010	1.499	✓		"	"
1.100	+/-.010	1.100	✓		"	"
2.500	+/-.010	2.500	✓		"	"
1.31	+/-.030	1.308	✓		"	"
0.59	+/-.030	0.590	✓		"	"
R0.25	+/-.030	R0.250	✓		R-6	ref.
R0.30	+/-.030	R0.300	✓		"	"
ϕ0.150	+.005 / -.001	ϕ0.152	✓		Vern	GA-13
0.300	+/-.010	0.300	✓		"	"
1.900	+/-.005	1.900	✓		"	"

Measured by:	DAS 08 9-89	Checked by:	DAS 44 9-89	QC Inspector:	
Date:	15/09/22	Date:	15/09/22	Date:	

Engineering Approval: (If necessary)		Date:	

Rev	Date	Change	Revised by	Approved
B	14.07.31	New Issue	KJ	

DART AEROSPACE LTD	Work Order:	126952
Description: CO-PILOT COLLECTIVE HEAD (205	Part Number:	D5155-1
Inspection Dwg: Rev:		Page 1 of 1

INSPECTION SHEET

Drawing Dimension	Tolerance	Actual Dimension	Accept	Reject	Method of Inspection	Comments
2.16	+/-.030	2.160	✓		H-6	31006
0.38	+/-.030	0.376	✓		"	"
ϕ0.160	+.005/-.001	ϕ0.160	✓		"	"
ϕ0.500	+.006/-.001	ϕ0.500	✓		Vern	GA-13
ϕ0.860 X .150	+/-.010/+/-.010	ϕ0.860 X .151	✓		"	"
0.254	+.005/-0.000	0.255	✓		"	"
0.20	+/-.030	0.200	✓		"	"
0.50	+/-.030	0.500	✓		"	"
ϕ0.627	+.008/-.001	ϕ0.628	✓		"	"
1.25	+/-.030	1.249	✓		"	"
0.46	+/-.030	0.460	✓		H-6	31006
3.70	+/-.030	3.700	✓		"	"
0.830	+/-.010	0.831	✓		"	"
ϕ 1.170	+.005/-0.000	ϕ1.1715	✓		Mic	GA-02
ϕ1.660	+/-.010	ϕ1.658	✓		Mic	GA-02
0.100	+/-.010	0.100	✓		"	"
0.55	+/-.030	0.549	✓		Mic	GA-03
0.35	+/-.030	0.350	✓		H-6	31006
1.06	+/-.030	1.063	✓		"	"
0.13	+/-.030	0.125	✓		"	"
0.57	+/-.030	0.570	✓		Vern	GA-13
R0.06	+/-.030	R0.063	✓		R-6	ref.
ϕ0.0605	+/-.0005	ϕ0.0605	✓		Mic-6-P	GA-03/ref.
R0.09	+/-.030	R0.088	✓		R-6	ref.
3.58	+/-.030	3.580	✓		H-6	31006
R0.30	+/-.030	R0.300	✓		R-6	ref.
R0.25	+/-.030	R0.250	✓		"	"
1.100	+/-.010	1.101	✓		H-6	31006

Measured by:	DAS 08	Checked by:	DAS 44	QC Inspector:	
Date:	15/09/22 9-89	Date:	15/09/22 9-89	Date:	

Engineering Approval: (If necessary)		Date:	

Rev	Date	Change	Revised by	Approved
B	14.07.31	New Issue	KJ	

DART AEROSPACE

Part Number: D5155-1	Rev: B	- Page 1 -
Description: CO-PILOT COLLECTIVE	Inspection Dwg: D5155	Work Order: 126952

Element name	Nominal	UpperTol	LowerTol	Actual	Deviation	TolBar
1	0.19000	0.03000	-0.03000	0.18872	-0.00128	-*****___
2	2.80000	0.01000	0.00000	2.80150	0.00150	<<---+---
3	4.70000	0.01000	-0.01000	4.69734	-0.00266	___**___
D4	0.350	0.030	-0.030	0.348	-0.002	-*****___
5	0.06000	0.03000	-0.03000	0.06519	0.00519	******___
D6	0.330	0.030	-0.030	0.325	-0.005	___***___
D7	0.227	0.010	-0.010	0.227	0.000	******___
D8	1.870	0.010	-0.010	1.870	0.000	******___
D9	0.125	0.005	-0.001	0.125	0.000	____****__
10	14.00000	0.50000	-0.50000	14.22434	0.22434	******___
D11	0.350	0.030	-0.030	0.351	0.001	******___
D12	2.047	0.005	-0.005	2.047	0.000	******___
13	0.50000	0.03000	-0.03000	0.50092	0.00092	******___
14	2.16000	0.03000	-0.03000	2.15827	-0.00173	-*****___
15	0.38000	0.03000	-0.03000	0.37523	-0.00477	___***___
16	0.83000	0.03000	-0.03000	0.83035	0.00035	******___
17	0.16000	0.00400	-0.00100	0.16236	0.00236	******___
18	0.15000	0.01000	-0.01000	0.14938	-0.00062	-*****___
19	0.86000	0.01000	-0.01000	0.85755	-0.00245	___**___
20	0.50000	0.00600	-0.00100	0.50120	0.00120	____*___
21	0.25400	0.00500	0.00000	0.25425	0.00025	____*****-
22	0.20000	0.03000	-0.03000	0.20107	0.00107	******___
23	2.50000	0.01000	-0.01000	2.49954	-0.00046	-*****___
24	0.25000	0.03000	-0.03000	0.25245	0.00245	******___
25	0.30000	0.01000	-0.01000	0.29918	-0.00082	__****___
26	1.90000	0.01000	-0.01000	1.89985	-0.00015	******___
27	1.50000	0.01000	-0.01000	1.49946	-0.00054	-*****___
28	1.10000	0.01000	-0.01000	1.09791	-0.00209	___***___
29	2.70000	0.03000	-0.03000	2.69853	-0.00147	-*****___

Measured by: Mathieu Lamarche	Audited by: DAS 44 9-89	Preliminary Approval:
Date: 2015-10-7	Date: 15/10/07	Date:

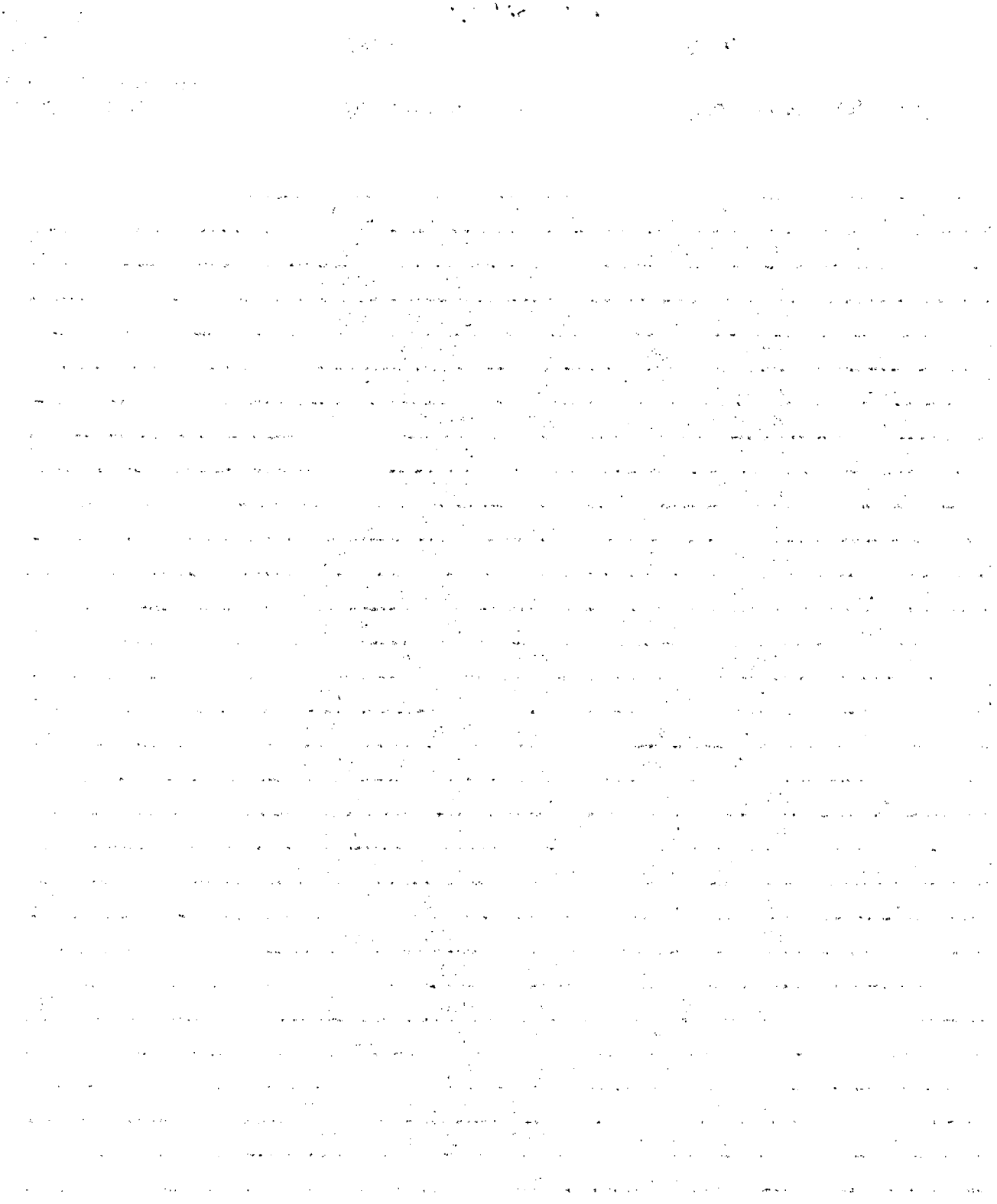

DART AEROSPACE

Part Number: D5155-1	Rev: B	- Page 2 -
Description: CO-PILOT COLLECTIVE	Inspection Dwg: D5155	Work Order: 126952

Element name	Nominal	UpperTol	LowerTol	Actual	Deviation	TolBar
30	2.50000	0.01000	-0.01000	2.49847	-0.00153	---***---
31	1.10000	0.01000	-0.01000	1.09776	-0.00224	----**----
D32	1.000	0.030	-0.030	1.000	0.000	******----
33	0.25000	0.03000	-0.03000	0.25169	0.00169	******----
34	0.25000	0.03000	-0.03000	0.25246	0.00246	******----
35	0.62700	0.00800	-0.00100	0.62700	0.00000	----*****-
36	1.17000	0.00500	0.00000	1.17176	0.00176	----*----
37	1.66000	0.01000	-0.01000	1.65863	-0.00137	--****----
38	0.83000	0.01000	-0.01000	0.82937	-0.00063	-*****----
39	3.70000	0.03000	-0.03000	3.69835	-0.00165	-*****----
40	0.46000	0.03000	-0.03000	0.45436	-0.00564	---***----
41	1.25000	0.03000	-0.03000	1.24936	-0.00064	******----
42	0.30000	0.03000	-0.03000	0.29948	-0.00052	******----
D43	0.250	0.030	-0.030	0.250	0.000	******----
44	1.10000	0.01000	-0.01000	1.09929	-0.00071	-*****----
45	0.55000	0.03000	-0.03000	0.54848	-0.00152	-*****----
46	0.35000	0.03000	-0.03000	0.34897	-0.00103	-*****----
47	0.09000	0.03000	-0.03000	0.06987	-0.02013	----****--
48	0.06050	0.00050	-0.00050	0.06078	0.00028	******----
49	47.00000	0.50000	-0.50000	46.99156	-0.00844	******----
50	0.06000	0.03000	-0.03000	0.06120	0.00120	******----
51	0.13000	0.03000	-0.03000	0.12439	-0.00561	---***----
52	0.10000	0.01000	-0.01000	0.10091	0.00091	******----

Measured by: Mathieu Lamarche	Audited by: DAS 44 9-89	Preliminary Approval:
Date: 2015-10-7	Date: 15/10/07	Date: